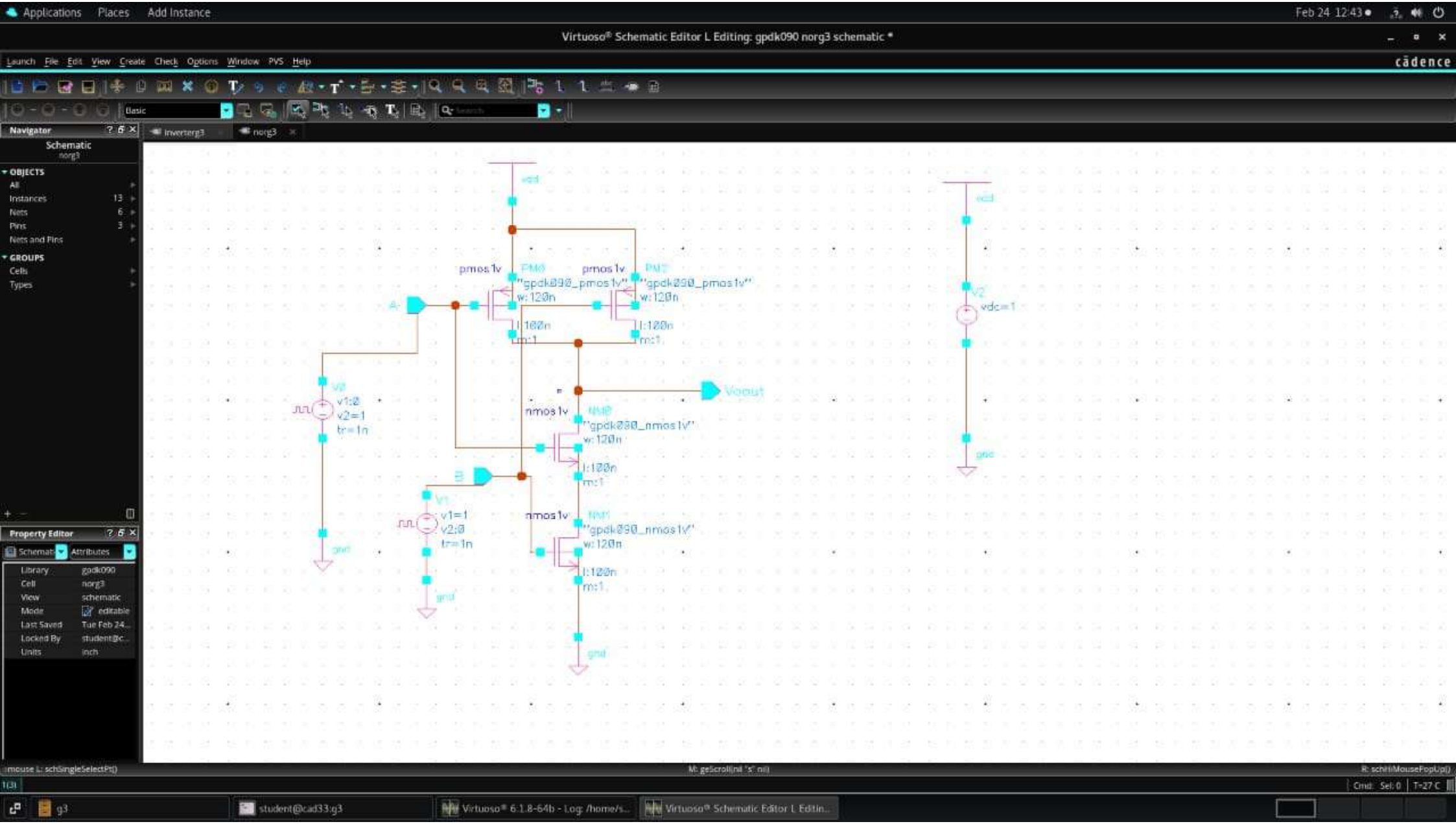
Applications Places Add Instance
Feb 24 12:43
Virtuoso® Schematic Editor L Editing: gpdk090 norg3 schematic *
Launch File Edit View Create Check Options Window PVS Help
cadence
Navigator
Schematic
norg3
OBJECTS
All
Instances 13
Nets 6
Pins 3
Nets and Pins
GROUPS
Cells
Types
Property Editor
Schematic Attributes
Library gpdk090
Cell norg3
View schematic
Mode editable
Last Saved Tue Feb 24...
Locked By student@c...
Units inch
inverterg3
norg3
vdd
pmos1v
PM0
"gpdk090_pmos1v"
w:120n
l:100n
m:1
PM1
"gpdk090_pmos1v"
w:120n
l:120n
m:1
A
B
V0
v1:0
v2=1
tr=1n
V1
v1=1
v2:0
tr=1n
Vout
nmos1v
NM0
"gpdk090_nmos1v"
w:120n
l:120n
m:1
NM1
"gpdk090_nmos1v"
w:120n
l:120n
m:1
gnd
V2
vdc=1
g3
student@cad33:g3
Virtuoso® 6.1.8-64b - Log: /home/s...
Virtuoso® Schematic Editor L Editin...

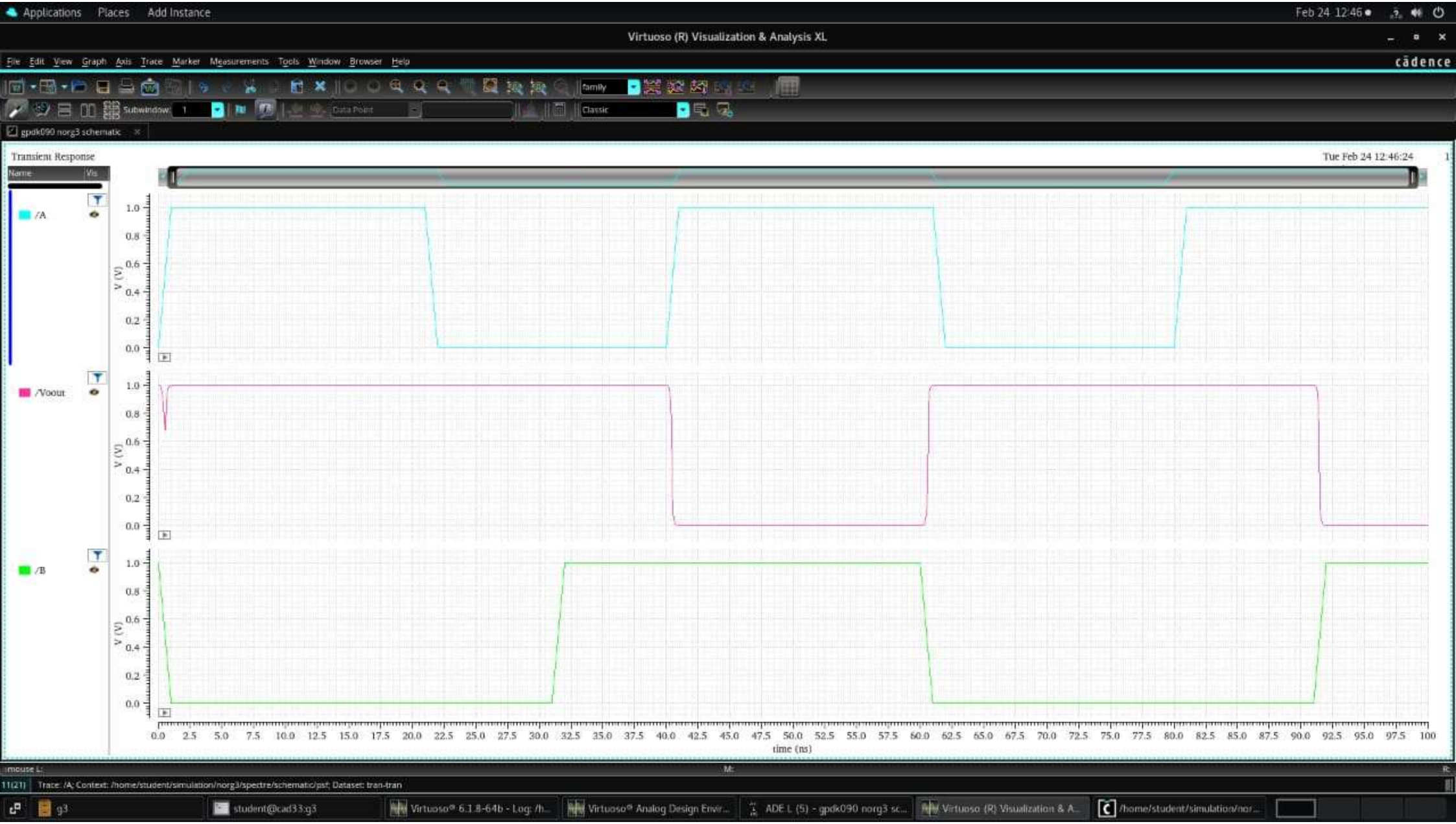
Applications Places Add Instance
Feb 24 12:46
Virtuoso (R) Visualization & Analysis XL
File Edit View Graph Axis Trace Marker Measurements Tools Window Browser Help
cadence
gpdk090 norg3 schematic
Transient Response
Tue Feb 24 12:46:24
Name
Vis
/A
/Voout
/B
V (V)
time (ns)
Trace: /A; Context: /home/student/simulation/norg3/spectre/schematic/psf; Dataset: tran-tran
g3
student@cad33:g3
Virtuoso® 6.1.8-64b - Log: /h...
Virtuoso® Analog Design Envir...
ADE L (5) - gpdk090 norg3 sc...
Virtuoso (R) Visualization & A...
/home/student/simulation/nor...

Applications Places Log: /home/student/CDS.log
Feb 24 13:04
Virtuoso (R) Visualization & Analysis XL
File Edit View Graph Axis Trace Marker Measurements Tools Window Browser Help
cadence
04c9 cmosinvertor schematic
Transient Response
Tue Feb 24 13:03:50
Name Vis
/Y
/B
/A
V (V)
time (ns)
Trace: /A; Context: /home/student/simulation/cmosinvertor/spectre/schematic/psf; Dataset: tran-tran
4c9
student@cad2:4c9
Virtuoso® 6.1.8-64b - Log: /home/s...
Virtuoso® Analog Design Environme...
ADE L (5) - 04c9 cmosinvertor sche...
Virtuoso (R) Visualization & Analysis...

Applications Places Log: /home/student/CDS.log.1
Feb 24 13:16
Virtuoso (R) Visualization & Analysis XL
File Edit View Graph Axis Trace Marker Measurements Tools Window Browser Help
cadence
04D0 nand schematic
Transient Response
Tue Feb 24 13:16:07
Name Vis
/Y
/B
/A
V (V)
time (ns)
no error

Applications Places Log: /home/student/CDS.log.1 Feb 24 13:17

Virtuoso® Analog Design Environment L Editing: 04D0 nand schematic *

Launch File Edit View Create Check Options Window PVS Help cadence

ADE L

Sim Time

Navigator

Schematic
nand

OBJECTS
All
Instances 11
Nets 6
Pins 5
Nets and Pins

GROUPS
Cells
Types

Property Editor

Schemati Attributes

Library	04D0
Cell	nand
View	schematic
Mode	editable
Last Saved	Tue Feb 24...
Locked By	student@c...
Units	inch

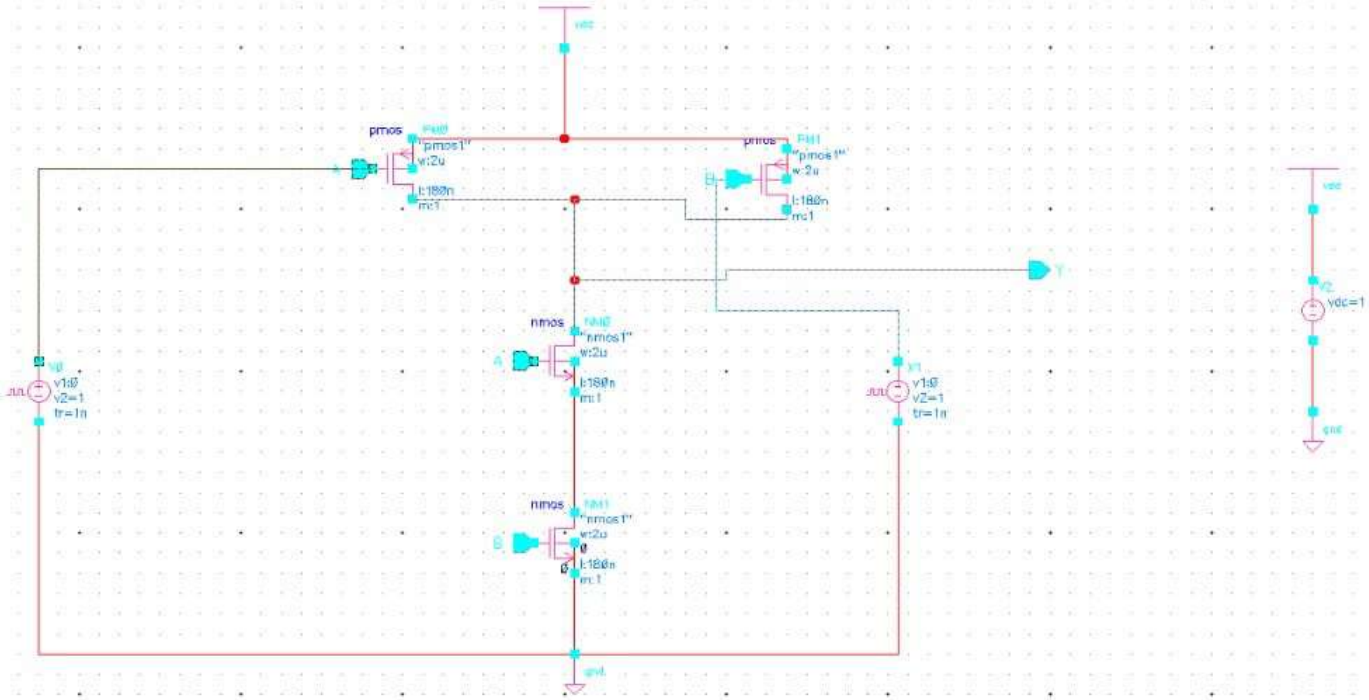

mouse L: schSingleSelectPt() M: _ddtExecuteAction(awvGetCurrentWindow()->vivaSession "splitAllStrips") R: schHiMousePopUp()

1(2) > modify_plot Cmd: Sel: 0 Status: Ready T=27 C Simulator: spectre aps

4D0 [student@cad3:4D... [student@cad3:4D... [Virtuoso® 6.1.8-... student@cad3:4D0 Virtuoso® 6.1.8-6... Virtuoso® Analog ... ADE L (1) - 04D0 ... /home/student/si... Virtuoso (R) Visua...

Applications Places Virtuoso (R) Visualization & Analysis XL Mar 3 13:02

Virtuoso® Analog Design Environment L Editing: 4c9 xor schematic

System Not Registered
Please register your system to receive software updates.
Register System...

Launch File Edit View Create Check Options Window PVS Help

ADE L

Sim Time

Navigator

Schematic
xor

OBJECTS
All
Instances 29
Nets 11
Pins 7
Nets and Pins

GROUPS
Cells
Types

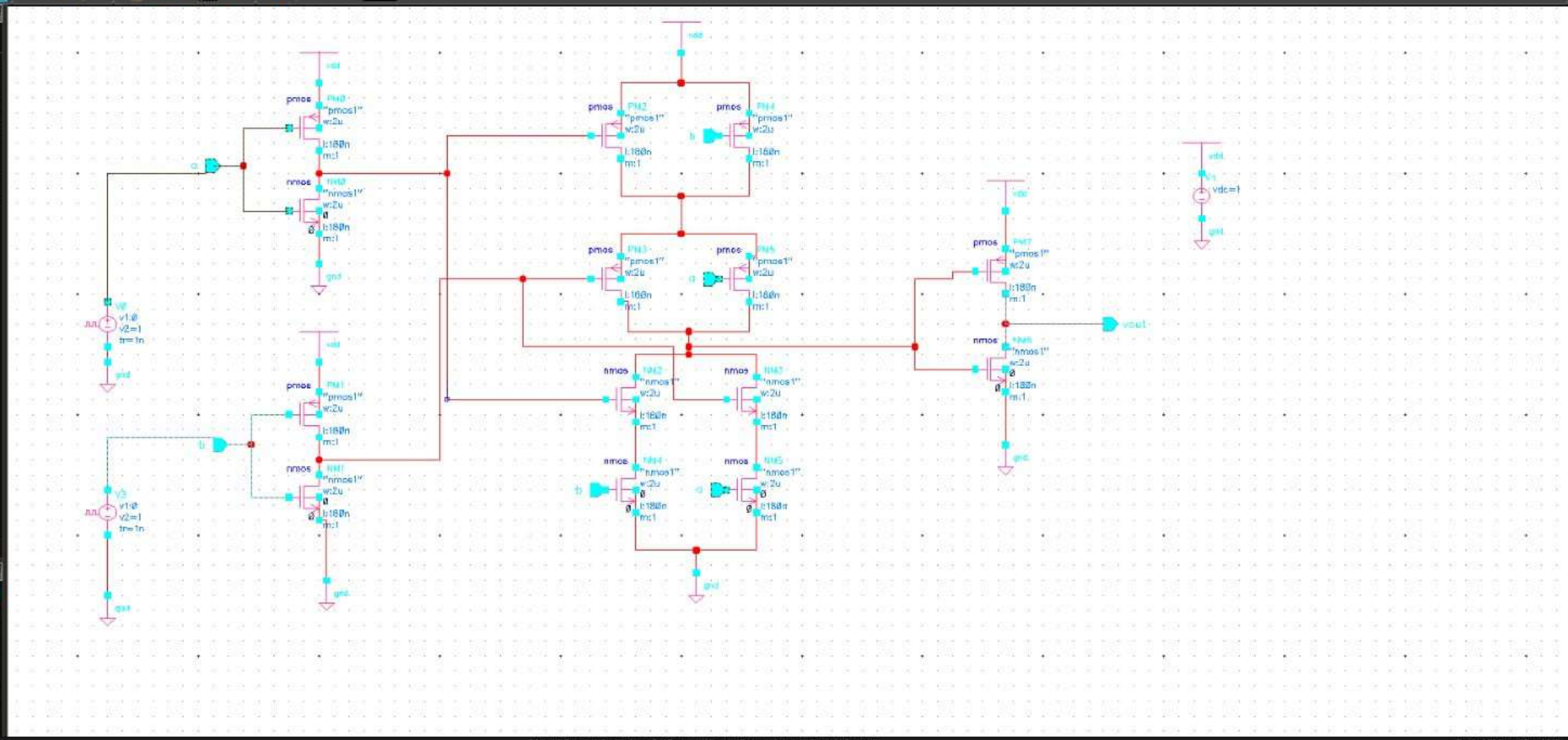

Property Editor

Schemati Attributes

Library	4c9
Cell	xor
View	schematic
Mode	editable
Last Saved	Tue Mar 3 ...
Locked By	student@c...
Units	inch

mouse L: schSingleSelectPt() M: _ddtExecuteAction(awvGetCurrentWindow()->vivaSession "splitAllStrips") R: schHiMousePopUp()

1(2) Net 'net8' Cmd: Sel: 0 Status: Ready T=27 C Simulator: spectre aps

04c9 student@cad2:04c9 Virtuoso® 6.1.8-64b - Lo... Virtuoso® Analog Design... [ADE L (4) - 4c9 xor sch... [Virtuoso (R) Visualizatio... [/home/student/simulatio... Gmail — Mozilla Firefox

Applications Places Virtuoso® 6.1.8-64b - Log: /home/student/CDS.log
Mar 3 12:46
Virtuoso (R) Visualization & Analysis XL
System Not Registered
Please register your system to receive software updates.
Register System...
File Edit View Graph Axis Trace Marker Measurements Tools Window Browser Help
4c9 xor schematic
Transient Response
Tue Mar 3 12:45:14
Name
Vis
/vout
/b
/a
V (V)
time (ns)
Trace: /a; Context: /home/student/simulation/xor/spectre/schematic/psf; Dataset: tran-tran
04c9
student@cad2:04c9
Virtuoso® 6.1.8-64b - Log: /h...
Virtuoso® Analog Design Envir...
ADE L (4) - 4c9 xor schematic
Virtuoso (R) Visualization & A...
/home/student/simulation/xor...

Applications Places Log: /home/student/CDS.log Feb 24 13:13

Virtuoso® Analog Design Environment L Editing: 04c9 cmosinvertor schematic *

Launch File Edit View Create Check Options Window PVS Help cadence

ADE L

Sim Time

Navigator

Schematic
cmosinvertor

OBJECTS
All
Instances 11
Nets 6
Pins 5
Nets and Pins

GROUPS
Cells
Types

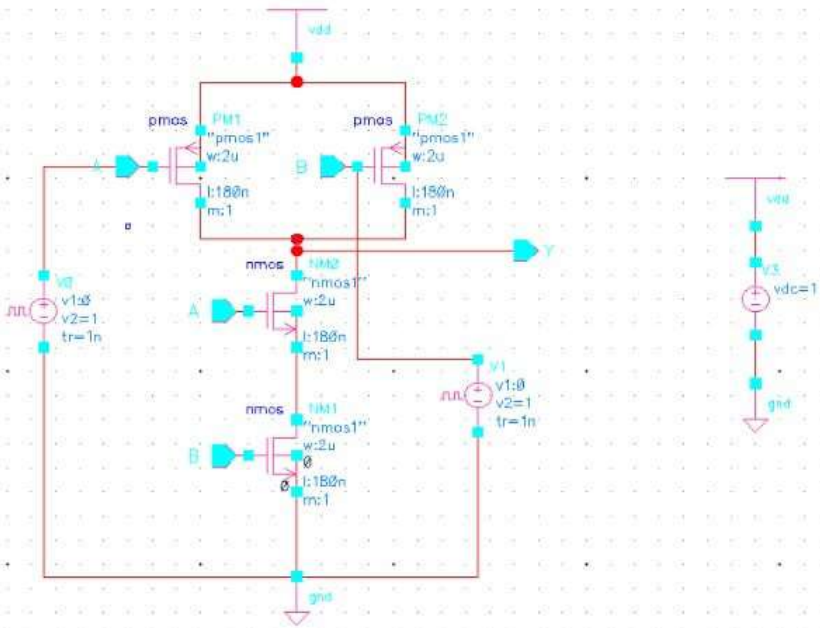

Property Editor

Schemati Attributes

Library	04c9
Cell	cmosinvert...
View	schematic
Mode	editable
Last Saved	Tue Feb 24...
Locked By	student@c...
Units	inch

mouse L: schSingleSelectPt() M: astiCancelSelect(hiGetCurrentWindow()) R: schHiMousePopUp()

3(4) Cmd: Sel: 0 Status: Ready T=27 C Simulator: spectre aps

4c9 student@cad2:4c9 Virtuoso® 6.1.8-64b - Log: /home/s... Virtuoso® Analog Design Environme... ADE L (5) - 04c9 cmosinvertor sche... Virtuoso (R) Visualization & Analysis...